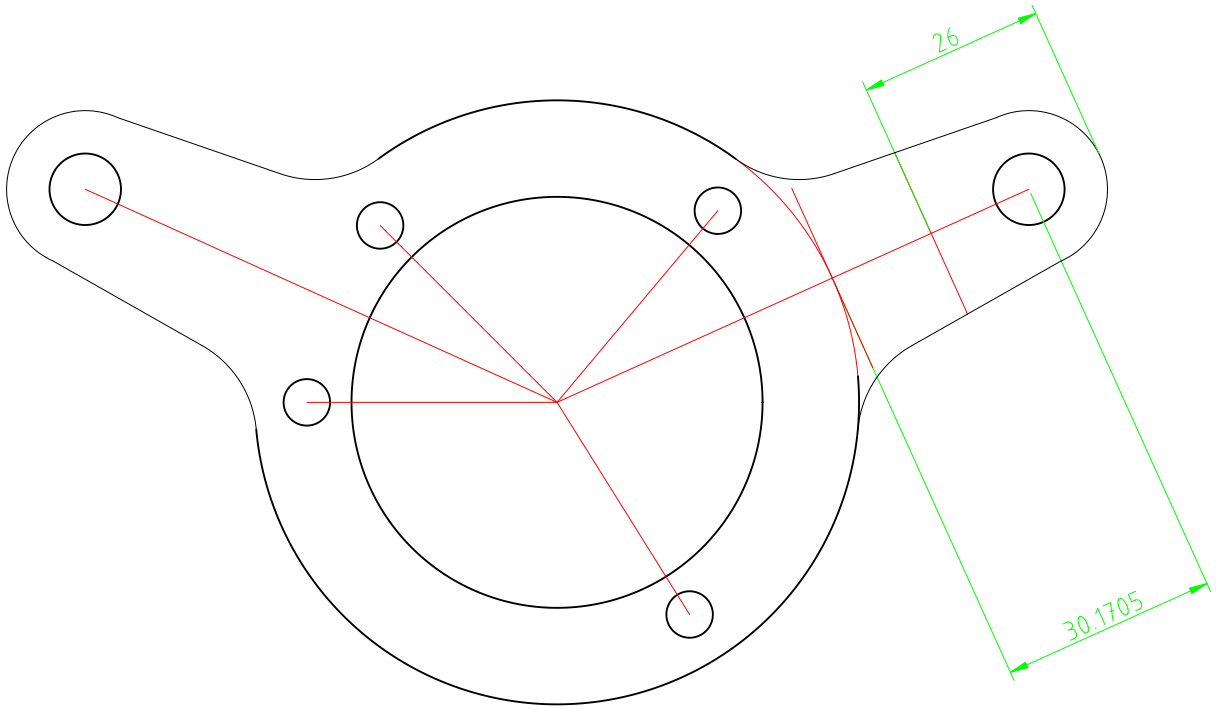
26
30.1705

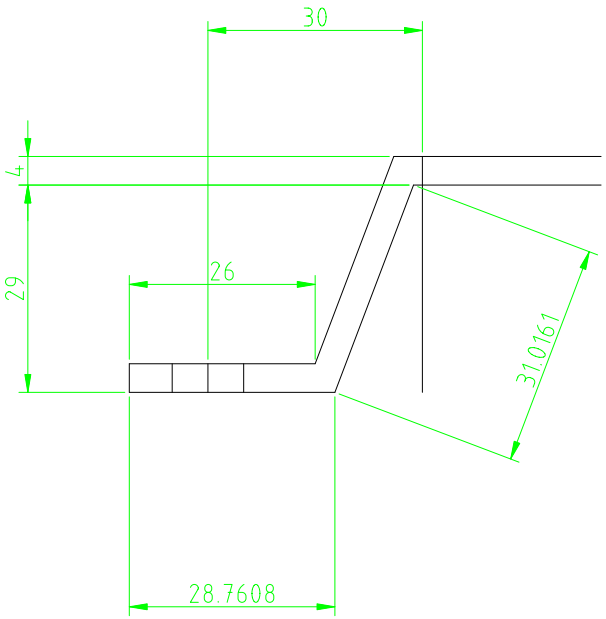
30
4
29
26
31.0161
28.7608